PROJECT NO.	SHEET NO.	TOTAL SHEETS
40-808I	1	4

PROPOSED PLAN FOR THE TOWN OF KIAWAH ISLAND KIAWAH ISLAND PARKWAY BRIDGE OVER THE KIAWAH RIVER JOINT REPLACEMENT

INDEX OF SHEETS

1. Title Sheet
2. Existing Plan & Profile
3. Stage Construction
4. Joint Replacement Sequence

-N-

SITE LOCATION

GATED ENTRANCE TO KIAWAH ISLAND

Submit Shop Plans to:

Collins Engineers Inc.
ATTN: Damon Pellegrini, P.E.
225 Seven Farms Dr, Suite 200
Charleston, SC 29492
Telephone: (843)884-2027

Approximate Location of Bridge is

Latitude	80°- 07' - 56.16"
Longitude	32°- 36' - 14.06"

SUMMARY OF ESTIMATED QUANTITIES

BID ITEM	PAY ITEM	UNIT	QUANTITY
1	LUMP SUM	EA	1

3 DAYS BEFORE DIGGING IN SOUTH CAROLINA

CALL 811

PALMETTO UTILITY PROTECTION SERVICES, INC. (PUPS)
ALL UTILITIES MAY NOT BE A MEMBER OF PUPS.

NOTE: EXCEPT AS MAY OTHERWISE BE SPECIFIED ON THE PLANS OR IN THE SPECIAL PROVISIONS, ALL MATERIALS AND WORKMANSHIP ON THIS PROJECT SHALL CONFORM TO THE SOUTH CAROLINA DEPARTMENT OF TRANSPORTATION STANDARD SPECIFICATIONS FOR HIGHWAY CONSTRUCTION (2007 EDITION) AND THE STANDARD DRAWINGS FOR ROAD CONSTRUCTION IN EFFECT AT THE TIME OF LETTING.

CONSULTING ENGINEERING FIRM

COLLINS ENGINEERS INC.
225 SEVEN FARMS DR
SUITE 200
CHARLESTON, SC 29492
(843) 884-2027
www.collinsengr.com

ENGINEER OF RECORD

SOUTH CAROLINA COLLINS ENGINEERS, INC. No. C01272 CERTIFICATE OF AUTHORIZATION

SOUTH CAROLINA PROFESSIONAL ENGINEER 9/06/13 No. 29586 DAMON M. PELLEGRINI

FOR CONSTRUCTION : _____ _____ DATE

PROJECT NO.	SHEET NO.	TOTAL SHEETS
40-8081	2	4

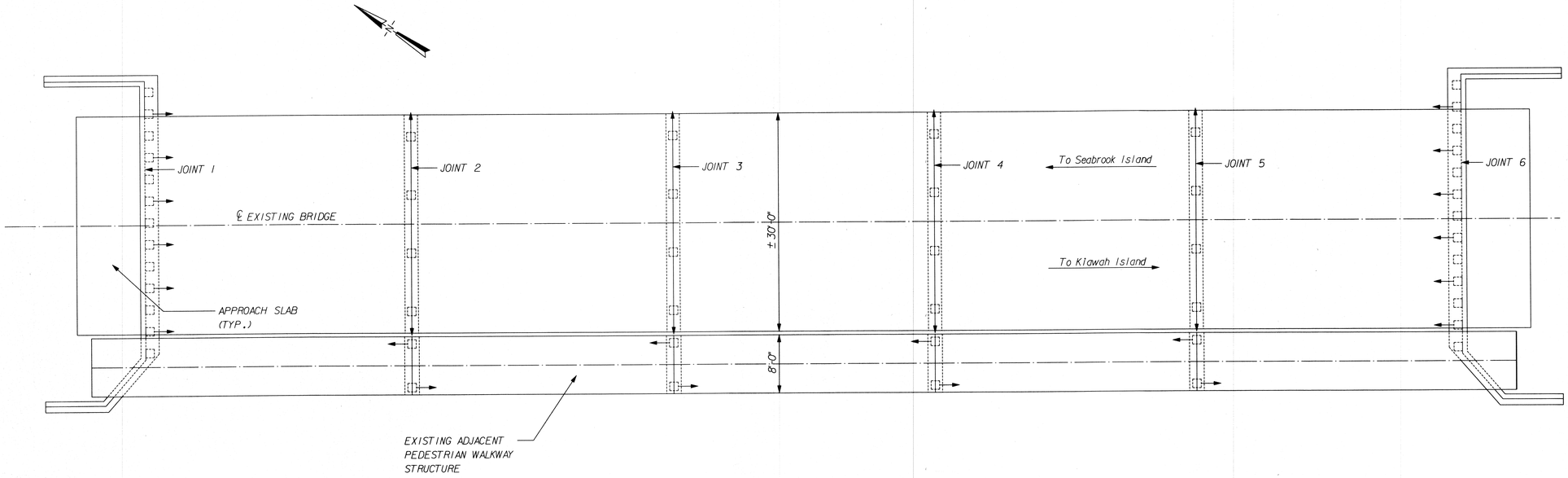

EXISTING BRIDGE PLAN

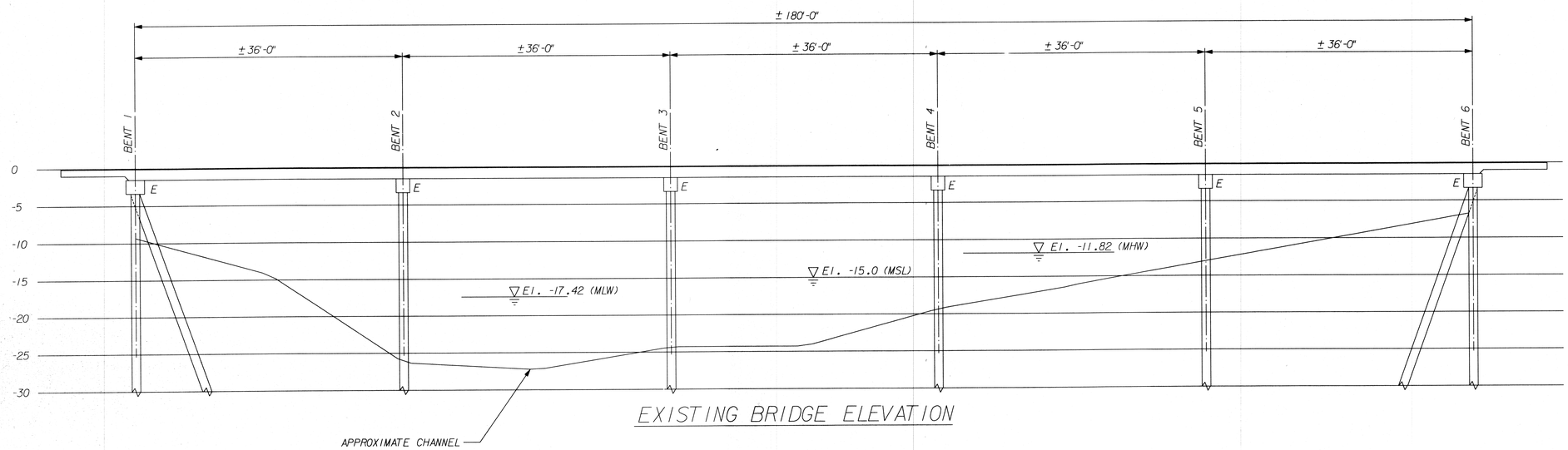

EXISTING BRIDGE ELEVATION

GENERAL NOTES

1. All work shall comply with federal, state, and local laws.

2. All traffic control, materials, and worksmanship shall conform to the requirements specified in these contract plans and with the contract project specifications.

3. Contractor is responsible for safety of the site and all persons on the site until the project is complete.

4. It should be noted that as-built plans do not exist and the contractor shall verify information needed for execution of identified work. Plan dimensions and details shown on these contract documents are based primarily on field measurements and are subject to nominal construction variations. It shall be the contractor's responsibility to verify such dimensions and details in the field and make necessary adjustments subject to the approval of the owner before performing the work. Such variations shall not be cause for additional compensation for a change in the scope of work.

5. All elevations referenced on these plans are based on an assigned top of deck elevation of 0.0. All elevations shall be verified in the field by the contractor.

6. For all repair items requiring the removal of existing structure materials, marine growth, and/or other deletrious substances, the contractor shall capture all materials and substances removed and not allow their discharge into the surrounding land, water, or air. All debris created during the execution of the specified work shall be removed from the project site. No oil or other hazardous substance shall be discharged into the water around the project site. All products of removal operations, debris, and hazardous substances shall be properly disposed of according to the specifications and regulations of all governing agencies, and shall be the sole responsibility of the contractor.

7. Once on site, the contractor shall complete a survey of the project site to verify the existing conditions. Any conditions found b the contractor that were not anticipated on the contract plans and that will affect the cost of implementation o the specified project shall be immediatley brought to the attention of the owner.

EXECUTION

1. Comply with all manufacturer's requirements and recommendations for handling, storing, preperation, installation, and curing.

SOUTH CAROLINA CERTIFICATE OF AUTHORIZATION COLLINS ENGINEERS, INC. No. C01272

SOUTH CAROLINA PROFESSIONAL ENGINEER 09/06/13 No. 29998 DIMON M. PELLEGRINO

COLLINS ENGINEERS INC.
225 SEVEN FARMS DR
SUITE 200
CHARLESTON, SC 29492
(843) 884-2027
www.collinsengr.com

EXISTING PLAN & ELEVATION

FILE NO.	DATE	DRAWN BY:	CHECKED BY:	DWG. NO.
40-8018	05/2013	TWR	DMP	2

PROJECT NO.	SHEET NO.	TOTAL SHEETS
40-8081	3	4

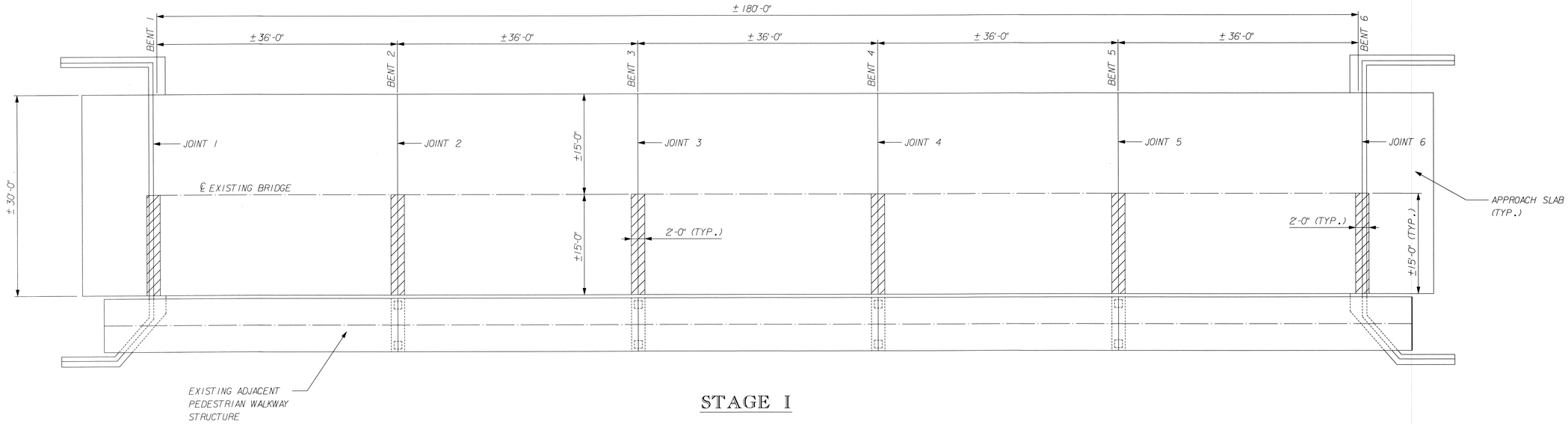

STAGE I

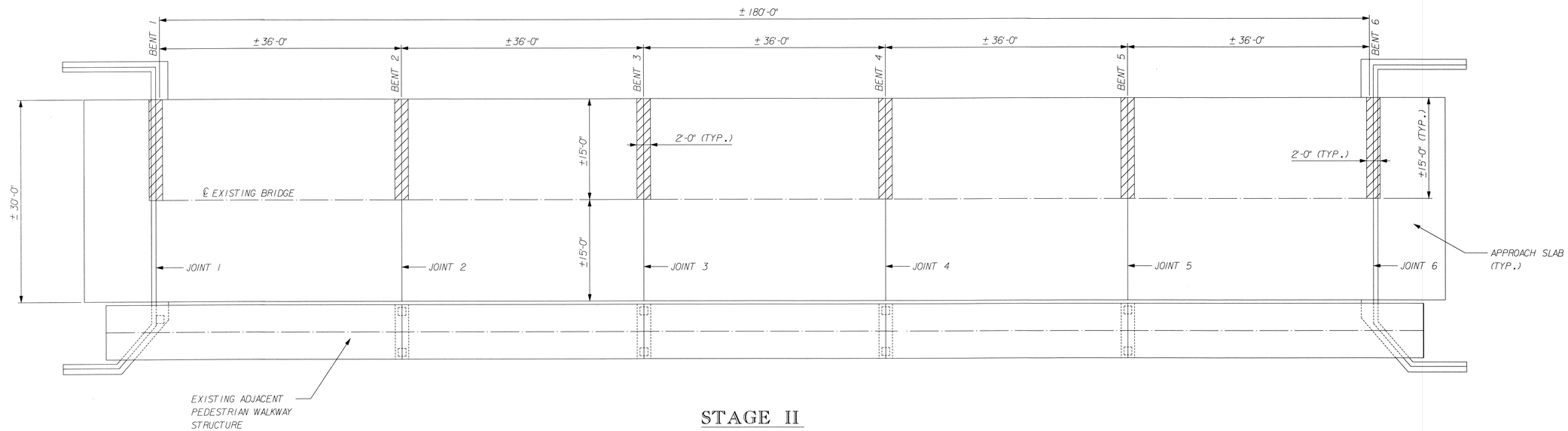

STAGE II

Notes

One lane of traffic and pedestrian access shall be maintained at all times.

LIMITS OF CONSTRUCTION

SOUTH CAROLINA COLLINS ENGINEERS, INC. No. C01272 CERTIFICATE OF AUTHORIZATION

SOUTH CAROLINA LICENSED PROFESSIONAL ENGINEER 09/06/13 No. 29669 DAMIAN M. PELLEGRINO

TOWN OF KIAWAH ISLAND SOUTH CAROLINA

COLLINS ENGINEERS INC.
225 SEVEN FARMS DR
SUITE 200
CHARLESTON, SC 29492
(843) 884-2027
www.collinsengr.com

STAGE CONSTRUCTION

FILE NO.	DATE	DRAWN BY:	CHECKED BY:	DWG. NO.
40-8018	05/2013	TWR	DMP	3

PROJECT NO.	SHEET NO.	TOTAL SHEETS
40-8081	4	4

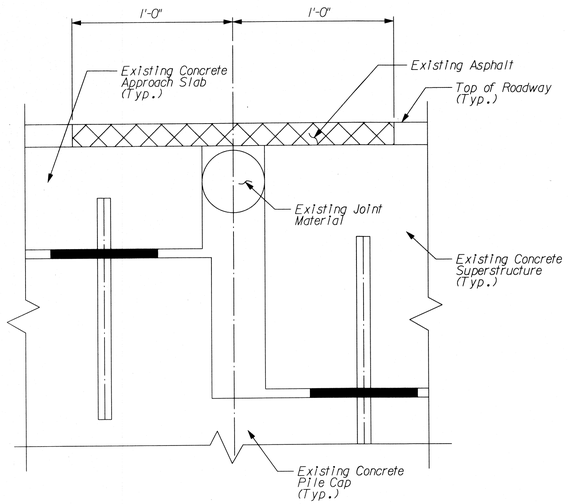

Section at Joints 1 & 6

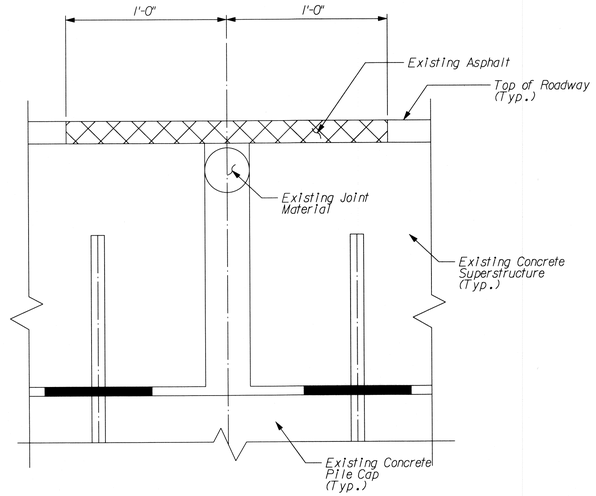

Section at Joints 2 thru 5

STEP 1

Remove complete thickness of asphalt 1'-0" on each sides of the joint centerline.

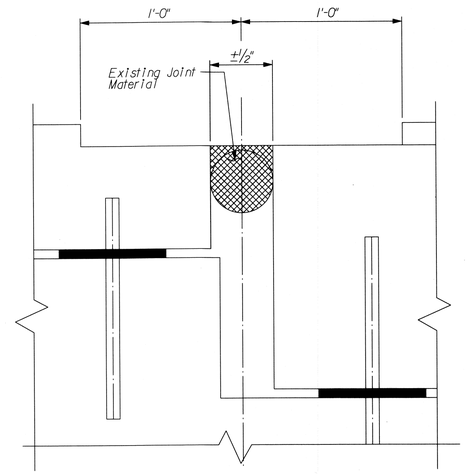

Section at Joints 1 & 6

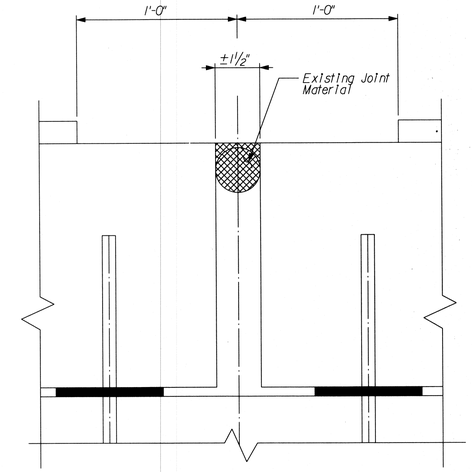

Section at Joints 2 thru 5

STEP 2

Remove existing joint material and clean joint of dirt and debris.
All surfaces should be prepared according to all manufacturer procedures and recommendations.

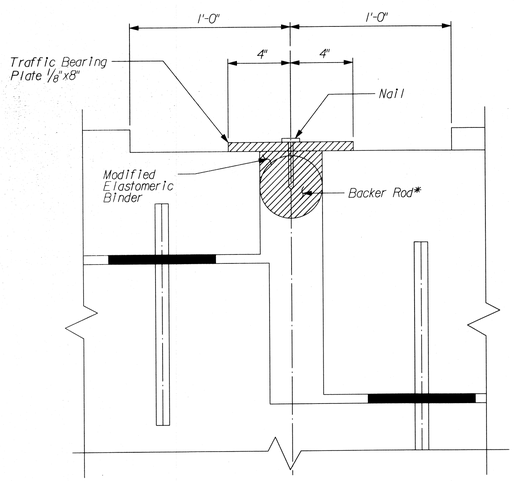

Section at Joints 1 & 6

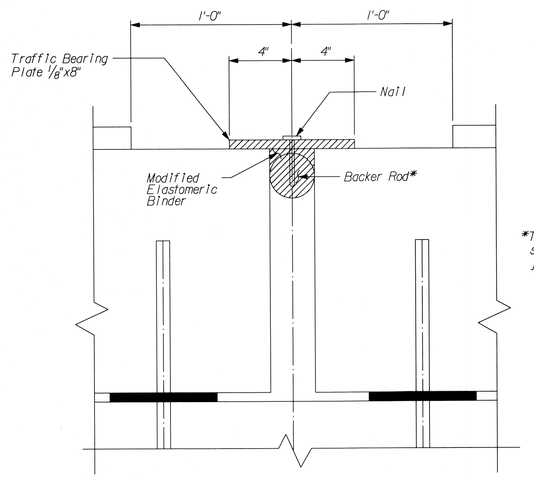

Section at Joints 2 thru 5

*The backer rods shall be sized to fit each individual joint.

STEP 3

Install backer rod, modified elastomeric binder, and traffic bearing plate.
Follow all manufacturer procedures and reccomeendations.

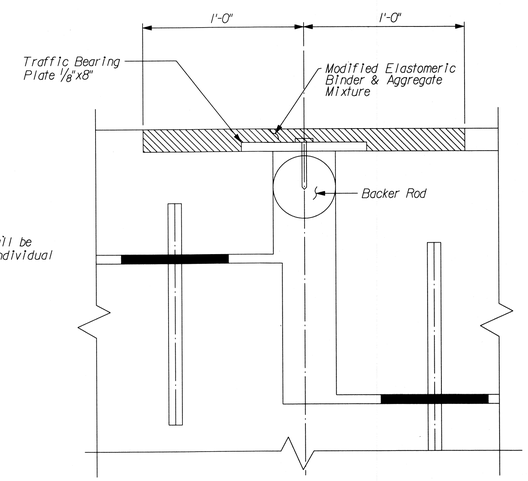

Section at Joints 1 & 6

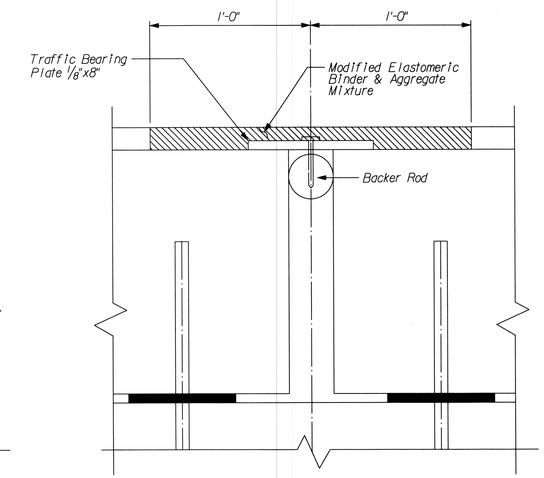

Section at Joints 2 thru 5

STEP 4

Pour modified elastomeric binder and aggregate mixture.
Follow all manufacturer procedures and reccomeendations.

Legend

Remove

Install

SOUTH CAROLINA COLLINS ENGINEERS, INC. No. C01272 CERTIFICATE OF AUTHORIZATION

SOUTH CAROLINA LICENSED PROFESSIONAL ENGINEER 09/04/13 No. 29899 DAMON M. PELLEGRINI

TOWN OF KIAWAH ISLAND SOUTH CAROLINA

COLLINS ENGINEERS INC.
225 SEVEN FARMS DR
SUITE 200
CHARLESTON, SC 29492
(843) 884-2027
www.collinsengr.com

JOINT REPLACEMENT SEQUENCE

FILE NO.	DATE	DRAWN BY:	CHECKED BY:	DWG. NO.
40-8018	05/2013	TWR	DMP	4